# BICM-ID for Relay System Allowing Intra-link Errors and a Similarity Constellation to ARQ Schemes

**Meng Cheng**[1], **Ade Irawan**[1], **Khoirul Anwar**[1], **and Tad Matsumoto**[1, 2]

[1]Japan Advanced Institute of Science and Technology (JAIST), Japan
[2]Center for Wireless Communication (CWC), University of Oulu, Finland

**Abstract**— In this paper, we propose an accumulator-assisted (ACC) relay system with bit-interleaved coded modulation using iterative decoding (BICM-ID) technique and apply the network topology to an Automatic Repeat Request (ARQ) scheme. Our code design is based on the analysis of the extrinsic information transfer (EXIT) chart. The ACC enables the convergence tunnel of the EXIT curves opening until almost the (1, 1) point of the mutual information, which avoids the error floor. The most advantageous point of the proposed technique is that even though errors may happen in the intra-link (source-relay), they can be corrected at the destination by exploiting the correlation knowledge between the source and the relay nodes. This technique significantly reduces the complexity of the relay where the source bits are simply extracted, even though errors may occur due to the imperfect channel. The error rate of the intra-link can be estimated at the destination node by using the a-posteriori Log likelihood Ratios (LLRs) of the two decoders. Then, it can be further utilised in the iterative processing. Since the relay location directly influences the quality of the intra-link, we change the relay locations, and provide the analysis of the performances corresponding to different relay locations. The theoretical background of this technique is the Slepian-Wolf/Shannon theorem for correlated source coding. The simulation results show that the bit-error-rate (BER) performances of the proposed system are very close to theoretical limits supported by the Slepian-Wolf/Shannon theorem. In this paper, it is also shown that if the intra-link is error free, the topology of the relay network is equivalent to an ARQ scheme that exploits Shannon's random coding theorem by utilising an interleaver in the framework of ARQ. Based on this observation, results of simulations conducted to evaluate the throughput of an ARQ scheme are presented.

## 1. INTRODUCTION

General relay systems usually consist of three basic components, source, relay nodes and a common destination node. Specifically, the transmitter is able to broadcast the information to both the relay and the destination nodes. The relay receives signals from the source and re-transmits them to the destination, by using different strategies. The signals from both the source and the relay sides can be received at the destination, while in different time slots.

Since the intra-link (source-relay link) of relay systems is always intractable to deal with, it is assumed to be error free in most of the works so far. In [1], an LLR updating function is used at the receiver by exploiting the source-relay correlation, represented by the intra-link error rate, in order to enhance the system performances. Based on this contribution, we adopt the Bit-Interleaved Coded Modulation using Iterative Decoding (BICM-ID) technique [4] for higher order modulation schemes. Moreover, we also show that if the intra-link is error free, the topology of the relay network is equivalent to an Automatic Repeat Request (ARQ) scheme, where the relay re-transmits the incorrectly-detected frame of the prior transmission. Here we exploit Shannon's random coding theorem to achieve the best performance by utilising an interleaver between the first and second transmissions in order.

This paper is organised as follows. The relay system mode is introduced in Section 2. The proposed decoding method and the BICM-ID technique are described in Section 3. In Section 4, the EXIT Chart analysis and the results of the BER simulations are provided. Based on above, a simple ARQ scheme is presented in Section 5. Finally, the conclusions are given in Section 6. All the channels are assumed to suffer from the Additive White Gaussian Noise (AWGN) through our discussions. The subscripts $\bullet_{sr}$, $\bullet_{sd}$, and $\bullet_{rd}$ are used to indicate the source-relay, source-destination and relay-destination links, respectively.

## 2. SYSTEM MODEL

There is one simple relay in the proposed system, operating in a half-duplex mode. During the first time slot, the transmitter broadcasts the signals to both the relay and the destination nodes. After

receiving signals from the source, the relay only extracts the data in a simple way while containing some errors. In the second time slot, the relay re-encodes the extracted data and re-transmits them to the destination.

Three scenarios of different relay locations are considered in this paper, as shown in Fig. 1(a). The relay can be allocated closer to the source or to the destination, or three nodes keep a same distance, $d$, with each other. The geometric-gain of the source-relay link with regard to the source-destination link can be defined as:

$$G_{sr} = \left(\frac{d_{sd}}{d_{sr}}\right)^{\alpha}, \tag{1}$$

where the path loss exponent $\alpha$ is assumed to be 3.52 [8] in our simulations. It is straightforward to derive the geometric-gain of the relay-destination link $G_{rd}$ in the same way. Moreover, the geometric-gain of the source-destination link, $G_{sd}$, is fixed to one. Therefore the received signals $y_{ij}$ ($ij \in \{sr, sd, rd\}$) at the relay and the destination node can be expressed as [8]:

$$y_{sr} = \sqrt{G_{sr}} \cdot h_{sr} \cdot s + n_r, \tag{2}$$

$$y_{sd} = \sqrt{G_{sd}} \cdot h_{sd} \cdot s + n_d, \tag{3}$$

$$y_{rd} = \sqrt{G_{rd}} \cdot h_{rd} \cdot s_r + n_d, \tag{4}$$

where $s$ and $s_r$ represent the symbols transmitted from the source and the relay, respectively. The fading channel gains, $h_{ij}$ ($ij \in \{sr, sd, rd\}$), are equal to one in AWGN channel. Notations $n_r$ and $n_d$ represent the zero-mean AWGN noise vectors at the relay and the destination with variances $\sigma_r^2$ and $\sigma_d^2$, respectively. The signal to noise ratio (SNR) of source-relay and relay-destination links at each location scenario are evaluated as follows: given the path loss parameter $\alpha$ equal to 3.52, we have $\mathrm{SNR}_{sr} = \mathrm{SNR}_{sd} + 21.19\,\mathrm{dB}$ and $\mathrm{SNR}_{rd} = \mathrm{SNR}_{sd} + 4.4\,\mathrm{dB}$ in the location A; $\mathrm{SNR}_{sr} = \mathrm{SNR}_{sd} + 4.4\,\mathrm{dB}$ and $\mathrm{SNR}_{rd} = \mathrm{SNR}_{sd} + 21.19\,\mathrm{dB}$ in location B; $\mathrm{SNR}_{sd} = \mathrm{SNR}_{rd} = \mathrm{SNR}_{sr}$ in location C. The SNR without subscripts is with regard to the direct link (source-destination) in the following discussions.

## 3. PROPOSED DECODING SCHEME

The diagram of the proposed relay system is illustrated in Fig. 1(b). In this paper, memory-1 half rate ($R = 1/2$) systematic non-recursive convolutional code (SNRCC) is adopted for both encoders $C_1$ and $C_2$. The original information bits at the source node are first encoded by the $C_1$, interleaved by $\Pi_1$, doped-accumulated by ACC with a doping rate $P_{d1}$ and modulated using BICM. We use 4PSK and 8PSK for the modulation. The ACC has the same structure with the memory-1 half rate systematic recursive convolutional code (SRCC). The output of the ACC is a systematic bit sequence, where every $P_{d1}$-th bit is replaced by the corresponding coded bit [1] within that frame. The code rate does not change after passing through it. The modulated symbols $s$ are transmitted to both the relay and the destination in phase one.

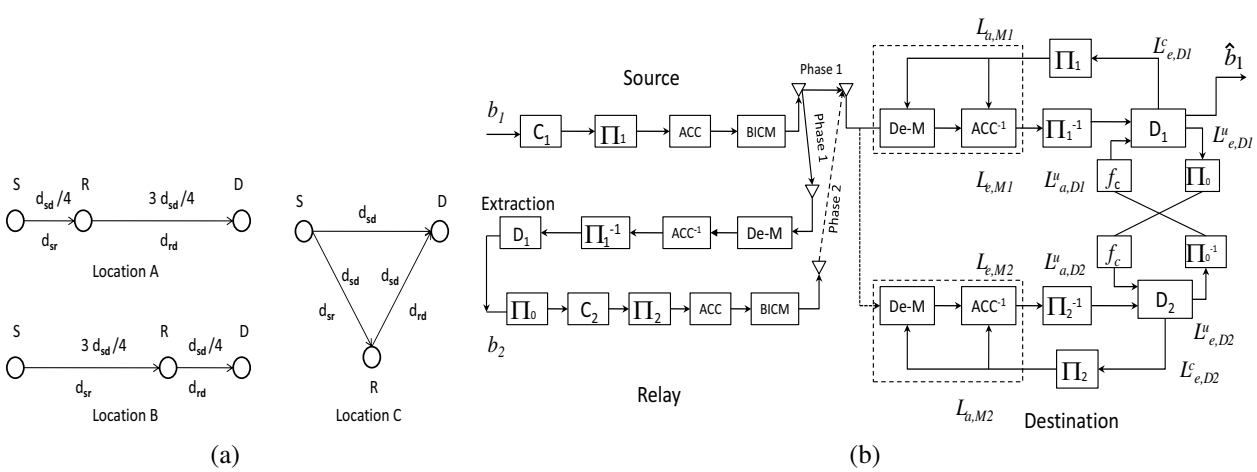


Figure 1: (a) Proposed relay system with different relay location scenarios, (b) the system structure.

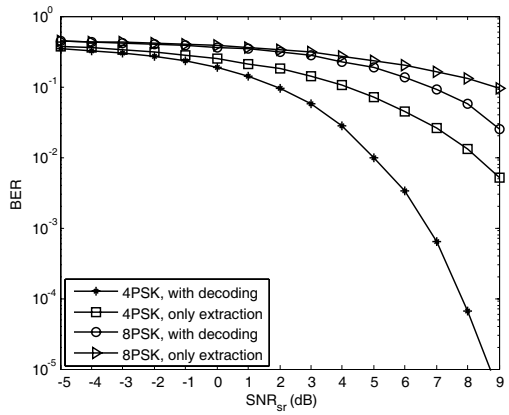


Figure 2: BER comparisons of the intra-link link in AWGN channel.

The received signals at the relay firstly go through the BICM demapper, ACC$^{-1}$ and de-interleaver $\Pi_1^{-1}$. Then hard decisions of the source bits are made by the decoder $D_1$. The Maximum A-Posteriori (MAP) algorithm proposed by Bahl, Cocke, Jelinek, and Raviv (BCJR) is used for decoding convolutional codes and the ACC. It's noticeable that the relay does not perform iterative channel decoding in our proposed system. After that, the recovered bits are interleaved by $\Pi_0$ and forwarded to $C_2$ encoder, $\Pi_2$, and then ACC (with doping rate $\mathrm{P}_{d2}$). Then the data are modulated into $s_r$, and transmitted to the destination during the second time slot.

At the destination node, the received signals $y_{sd}$ and $y_{rd}$ are firstly decoded via horizontal iterations (HI) according to Fig. 1(b). Independently, the extrinsic LLRs obtained from the two decoders $D_1$ and $D_2$ in HI are exchanged by several vertical iterations (VI) through an LLR updating function $f_c$ [1]. Finally, hard decisions of the original information can be made based on the a posteriori LLRs from $D_1$.

When the relay is closer to the source, signals going through the intra-link suffer from noises with less distortions. Errors at the relay node, with the probability $P_r(b_1 \neq b_2)$, may occur as shown in Fig. 2. Obviously, for both 4PSK and 8PSK cases, channel decoding at the relay node can achieve better BER performances. However, this advantage is not significant for low SNR$_{sr}$ scenarios. In this case, the systematic bits are simply extracted instead of performing channel decoding. Consequently, the relay complexity can be further reduced without decreasing the system performances.

### 3.1. BICM-ID Demapper

The extrinsic information at the receiver is exchanged between the demapper and the decoder, through the HI. Further improvement of demapping can be achieved using the BICM-ID technique by invoking the soft-decision feedbacks from the decoder's outputs [2]. The extrinsic LLRs of $v$-th bit of symbol $s$ after the demapper in AWGN channel can be expressed as

$$L_e\left(s_v\right) = \ln \frac{P\left(s_v = 1 \mid y\right)}{P\left(s_v = 0 \mid y\right)} = \ln \frac{\sum_{s\epsilon S1}\left\{\exp\left\{-\frac{|y-s|^2}{2\sigma_N^2}\right\}\prod_{w\neq v}^{M}\exp\left(s_w L_a\left(s_w\right)\right)\right\}}{\sum_{s\epsilon S0}\left\{\exp\left\{-\frac{|y-s|^2}{2\sigma_N^2}\right\}\prod_{w\neq v}^{M}\exp\left(s_w L_a\left(s_w\right)\right)\right\}}, \tag{5}$$

where $S_1$ and $S_0$ denote the set of labeling have $v$-th bit being zero or one, respectively. $M$ represents the number of bits per symbol and $L_a(s_w)$ is the LLR fed back from the decoder corresponding to the $w$-th position of the labeling patterns. The output LLRs of the demapper are then forwarded to the ACC decoder.

### 3.2. LLR Updating Function

First of all, given the a posteriori LLRs of the uncoded bits, $L^u_{p,D1}$ and $L^u_{p,D2}$, from the decoders $D_1$ and $D_2$, the intra-link error probability $P_r$ can be estimated as [1]:

$$P_r = \frac{1}{N}\sum_{n=1}^{N}\frac{e^{L^u_{p,D1}} + e^{L^u_{p,D2}}}{\left(1+e^{L^u_{p,D1}}\right)\left(1+e^{L^u_{p,D2}}\right)}, \tag{6}$$

where $N$ denotes the number of the a posteriori LLR pairs from the two decoders with sufficient reliability. Only the LLRs with absolute values greater than a given threshold can be chosen. The

threshold is set to one in our simulations. Based on the estimated error probability $P_r$ given by Eq. (6), the LLR updating function $f_c$ shown in Fig. 1(b) can be defined as follows [5]:

$$f_c(x) = \ln \frac{(1-P_r)\cdot \exp(x) + P_r}{(1-P_r) + P_r \cdot \exp(x)}, \tag{7}$$

where $x$ denotes the input LLRs. The output of $f_c$ is the updated LLRs by exploiting $P_r$ as the correlation knowledge of the intra-link. The VI operations at the receiver can be expressed as [6]:

$$L^u_{a,D1} = f_c\left\{\Pi_0^{-1}\left(L^u_{e,D2}\right)\right\} \tag{8}$$

$$L^u_{a,D2} = f_c\left\{\Pi_0\left(L^u_{e,D1}\right)\right\} \tag{9}$$

## 4. EXIT CHART AND BER ANALYSIS

The EXIT curves [3] of the HI loop with regards to the source-destination link's BICM-ID detector using 4PSK and 8PSK are shown in Fig. 3(a) and Fig. 3(b), where HI was performed 50 times in the simulations. During each HI, 5 times of VI take place between $D_1$ and $D_2$, which pushes down the EXIT curves of the decoder towards the lower right side [1]. For the combined EXIT curves of the demapper and the ACC$^{-1}$, the $x$-axis represents the a priori mutual information (MI) $I_a(DeM + ACC^{-1})$, while the $y$-axis represents the extrinsic MI $I_e(DeM + ACC^{-1})$. While for the decoder's EXIT curves, the $y$-axis denotes the a priori MI $I^c_a(D1)$ and $x$-axis denotes the extrinsic MI $I^c_e(D1)$. Each SNR value corresponds to a certain intra-link error probability $P_r$ according to Fig. 2. The ACC's doping rate $P_{d1}$ was properly chosen in order to get the best matching among those tested values between the demapper's and decoder's EXIT curves, as shown in Fig. 3. In our simulations, the doping rate $P_{d1}$ for the source-destination link and the $P_{d2}$ for the relay-destination were set at 5, 3, 3 for the scenarios A, B and C, respectively, for 4PSK. They are set at 4, 2, 8 for 8PSK.

Figure 4 shows the BER performances of the proposed system with 4PSK and 8PSK modulations. The frame length is 10000 in our simulations. Obviously, less SNR is needed to achieve the turbo cliff when the relay is getting closer to the source node. It's noticeable that in location A, the BER performances are almost the same when the relay either extracts the systematic bits or performs the channel decoding.

As can be seen in Fig. 4(a) and Fig. 4(b), the SNR threshold happens at low energy values for both the 4PSK and 8PSK modulations. Therefore, it is reasonable to rely on the Shannon/SW limit calculation using the Gaussian codebook. According to [7], the Shannon/SW limit with Gaussian codebook is $-1.55$ dB for 4PSK and 1.61 dB for 8PSK cases, both with the coding rate being 1/2. Therefore, the gaps of our proposed system are 2.75 dB and 2.89 dB for 4PSK and 8PSK, respectively.

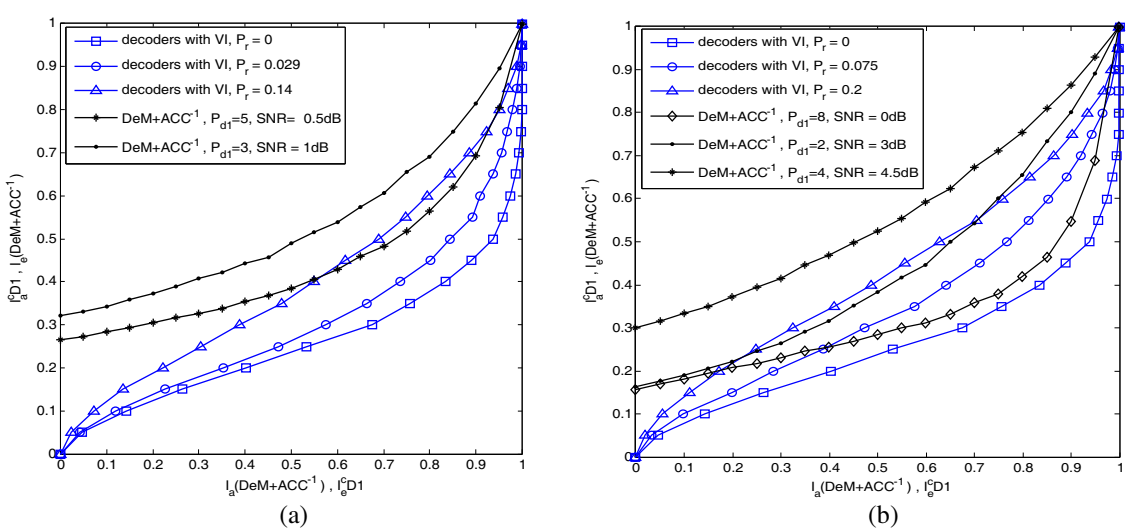


Figure 3: EXIT curves of HI for (a) 4PSK and (b) 8PSK in AWGN channel.

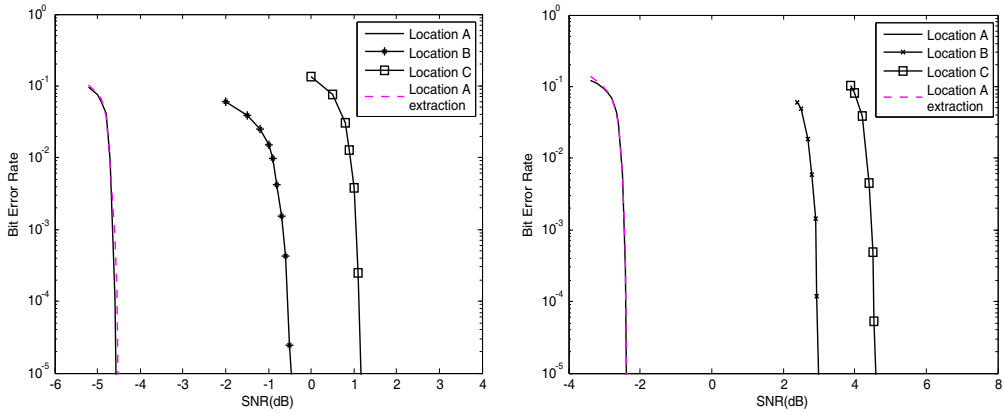


(a) (b)

Figure 4: BER of the proposed relay system for (a) 4PSK and (b) 8PSK in AWGN channel.

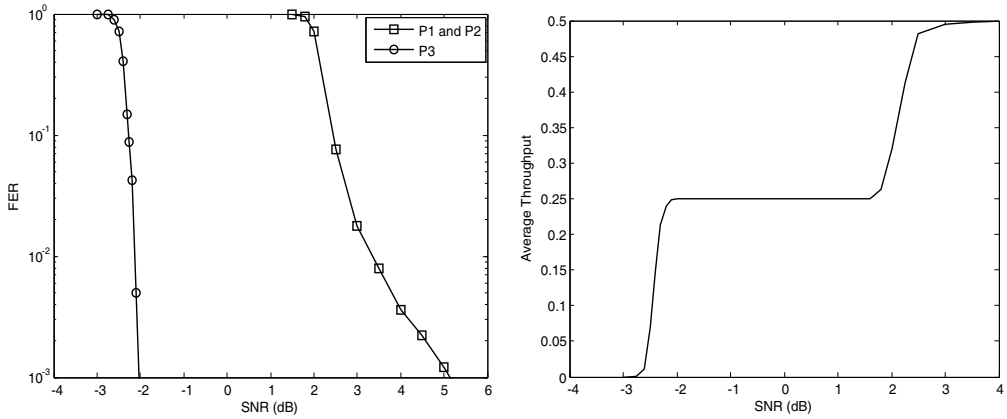


(a) (b)

Figure 5: (a) FER and (b) the average throughput of the ARQ scheme using 4PSK in AWGN channel.

## 5. PROPOSED ARQ SCHEME

If the intra-link of our previous system is assumed to be error free, a similarity constellation of a simple Automatic Repeat Request (ARQ) scheme can be developed: initially, the data frame is sent from the source to the destination and the receiver only performs HI for detecting. If the transmitter is acknowledged that the frame is correctly detected, it continues to transmit the next data frame. However, if error happens in this frame, with frame error rate (FER) denoted by $P_1$, second transmission takes place. Unlike the conventional ARQ scheme, with our proposed scheme, the frame should first be forwarded to a random interleaver before being re-transmitted, which is equivalent to the case when relay perfectly recovers the source bits and interleaves them before re-encoding. The FER for the second transmission is represented by $P_2$. Finally, if both transmissions fail, the receiver works exactly the same as our proposed relay system, which combines VI and HI, based on the received signals. Therefore, the FER $P_3$, which is the result of the collaboration of HI and VI decoding, can be significantly reduced. Assigning selective repeat ARQ, the average system throughput $T_{ave}$ is given by Eq. (10). The frame length is 4000 in our simulations and 10000 frames are tested. The results using 4PSK are shown in Fig. 5; Fig. 5(a) shows SNR versus $P_1$, $P_2$ and $P_3$ and Fig. 5(b) shows SNR versus the average throughput.

$$\begin{aligned} T_{ave} &= R\left[(1-P_1)+0.5P_1\left(1-P_2\right)+0.5P_1P_2\left(1-P_1P_2P_3\right)\right] \\ &= R\left[1-0.5P_1\left(1+P_2P_3\right)\right] \end{aligned} \tag{10}$$

where $R$ denotes the coding rate, which is 1/2 in our simulations.

## 6. CONCLUSIONS

In this paper, we have proposed a novel technique that combines the BICM-ID with our proposed relay scheme for higher order modulations, which allows the intra-link errors. The intra-link error

probability is regarded as the correlation knowledge between source and relay nodes, which can be estimated and further exploited at the receiver by the LLR updating function $f_c$ due to the error functions in the VI. Thereby, close-limit BER performances can be achieved without requiring high complexity at the relay. In addition, a simple ARQ strategy has been proposed based on the structure.

**REFERENCES**


1. Anwar, K. and T. Matsumoto, "Accumulator-assisted distributed Turbo codes for relay system exploiting source-relay correlation," *IEEE Trans. on Communications*, May 2011, submitted.
2. Zhao, D., A. Dauch, and T. Matsumoto, "BICM-ID using extented mapping and repetition code with irregular node degree allocation," *IEEE Vehicular Tech. Conf.-Spring, Barcelona*, 1–5, Sep. 2009.
3. Ten Brink, S., "Convergence behavior of iteratively decoded parallel concatenated codes," *IEEE Trans. Communications*, Vol. 49, 1727–1737, Oct. 2001.
4. Hanzo, L., T. H. Liew, and B. L. Yeap, *Turbo Coding, Turbo Equalisation and Space-time Coding for Transmission over Fading Channels*, John Wiley IEEE Press, New York, USA, 2002.
5. Lu, P.-S., V. Tervo, K. Anwar, and T. Matsumoto,, "Low-complexity strategies for multiple access relaying," *Vehicular Technology Conference (VTC Spring), 2011 IEEE 73rd*, 1–6, May 2011.
6. Anwar, K. and T. Matsumoto, "Spatially concatenated coded with Turbo equalization for correlated sources," *IEEE Trans. on Signal Processing*, Feb. 2011, submitted.
7. Cristescu, R., B. Beferull-Lozano, and M. Vetterli, "Networked Slepian-Wolf: Theory, algorithm and scalling laws," *IEEE Trans. on Information Theory*, Vol. 51, No. 12, 4057–4073, Dec. 2005.
8. Youssef, R. and A. Graell, and I. Amat, "Distributed serially concatenated codes for multi-source cooperative relay networks," *IEEE Trans. on Wireless Communications*, Vol. 10, No. 1, 253–263, Jan. 2011.