JAIST Repository
https://dspace.jaist.ac.jp/

Title	On convergence constraint precoder design for iterative frequency domain multiuser SISO detector
Author(s)	Tervo, Valtteri; Tolli, A; Karjalainen, J.; Matsumoto, Tad
Citation	2012 Conference Record of the Forty Sixth Asilomar Conference on Signals, Systems and Computers (ASILOMAR): 473-477
Issue Date	2012-11
Type	Conference Paper
Text version	author
URL	http://hdl.handle.net/10119/11477
Rights	This is the author's version of the work. Copyright (C) 2012 IEEE. 2012 Conference Record of the Forty Sixth Asilomar Conference on Signals, Systems and Computers (ASILOMAR), 2012, 473-477. Personal use of this material is permitted. Permission from IEEE must be obtained for all other uses, in any current or future media, including reprinting/republishing this material for advertising or promotional purposes, creating new collective works, for resale or redistribution to servers or lists, or reuse of any copyrighted component of this work in other works.
Description	

JAIST
JAPAN
ADVANCED INSTITUTE OF
SCIENCE AND TECHNOLOGY

Japan Advanced Institute of Science and Technology

On Convergence Constraint Precoder Design for Iterative Frequency Domain Multiuser SISO Detector

Valtteri Tervo*+, A Tölli*, J. Karjalainen†, Tad Matsumoto*+
{wade, atolli, matumoto}@ee.oulu.fi, juha.karjalainen@renesasmobile.com
*Centre for Wireless Communications, University of Oulu
P.O. Box 4500, 90014 University of Oulu, Finland.
+Japan Advanced Institute of Science and Technology
1-1 Asahi-Dai, Nomi, Ishikawa, 923-1292 Japan.
†Renesas Mobile Europe Oy
Elektroniikkatie 13, 90590 OULU, Finland

***Abstract*—Convergence constraint power allocation (CCPA) in single carrier multiuser (MU) single-input single-output (SISO) systems with iterative frequency-domain (FD) soft cancelation (SC) minimum mean-squared error (MMSE) equalization is considered in this paper. In order to exploit full benefit of iterative receiver, convergence properties need to be considered. The proposed scheme can guarantee that the desired mutual information point/value after sufficient amount of iterations is achieved. In this paper, successive convex approximation algorithm is proposed as a solving the non-convex convergence constraint power minimization problem. Furthermore, the results of EXIT-chart analysis demonstrate that the CCPA design can achieve the objectives described above.**

I. Introduction

Single carrier frequency division multiple-access (FDMA) has been selected as "de-facto" transmission scheme for the 3GPP long term evolution (LTE) standard and its advanced version (LTE-A) [1]. Due to the problems related to inter-symbol-interference (ISI) and multi-user interference (MUI) in single carrier FDMA, efficient low-complexity channel equalization techniques are required. Recently, iterative frequency domain equalization techniques have been considered as most potential candidate to mitigate ISI and MUI. However, to exploit the full merit of iterative receiver, the convergence properties of an iterative receiver needs to be taken into account at a transmitter side. Even though linear receivers, such as presented in [2], [3], can achieve good performance with low complexity, the rate loss between the channel decoder and the equalizer can be made smaller by applying the iterative structure and utilizing the extrinsic information exchange of the two soft in / soft out (SftI/SftO) blocks. In [4], [5], the impact of precoder design on the convergence properties of the soft cancellation (SC) frequency domain (FD) minimum mean-squared error (MMSE) equalizer is demonstrated. In [6], extrinsic information transfer (EXIT) analysis [7] is utilized to determine the optimal power allocation in a multiuser turbo coded code division multiple access (CDMA) system. In [8], the convergence analysis for MMSE based iterative equalizer is performed by using signal-to-noise (SNR) ratio variance charts [9]. Furthermore, they use the convergence analysis to formulate the transmitter power allocation problem in frequency selective single-input single-output (SISO) channels with the iterative receiver mentioned above, assuming the availability of perfect channel state information (CSI) both at the transmitter and the receiver. Recently in [10], in-depth analysis of the power allocation problem in single-carrier multiple-input multiple-output (MIMO) systems with iterative FD-SC-MMSE equalization has been presented.

The main contributions of this paper are summarized as follows: We extend and reformulate the power allocation problem presented in [10] to the systems with multiple users. Furthermore, we propose successive convex approximation (SCA) [11] algorithm to solve this non-convex problem. Since we consider only SISO system, precoding can be done only in frequency domain, and hence precoding is equivalent to power allocation in this context.

This paper is organized as follows: The system model of single carrier uplink transmission with multiple single-antenna users and a base station with single antenna is presented in Section II. In Section III, the formulation of CCPA problem is derived. The SCA algorithm is proposed for solving the CCPA problem in Section IV. The performance of proposed technique is demonstrated through simulations in Section V. Finally, conclusions are drawn in Section VI.

II. System Model

Consider single carrier uplink transmission[1] with multiple single-antenna users and a base station with single antenna as depicted in Fig. 1. Each user's data stream is encoded by forward error correction code (FEC) $\mathcal{C}_u$, $u = 1, 2, \ldots, N_U$. The encoded bits are bit interleaved and mapped onto a 2^{N_Q}-ary complex symbol, where N_Q denotes the number of bits

This research was carried out in the framework of the project Interference Management for Wireless Networks Beyond Present Horizon+ (IMANET+) which is funded by Finnish Funding Agency for Technology and Innovation (TEKES). This work was also in part supported by the Japanese government funding program, Grant-in-Aid for Scientific Research (B), No. 23360170. This work has been also supported by Riitta ja Jorma J. Takanen Foundation and Finnish Foundation for Technology Promotion.

[1]The major difference between single carrier and orthogonal frequency division multiplexing (OFDM) transmission techniques is that in OFDM there is no DFT before precoder.

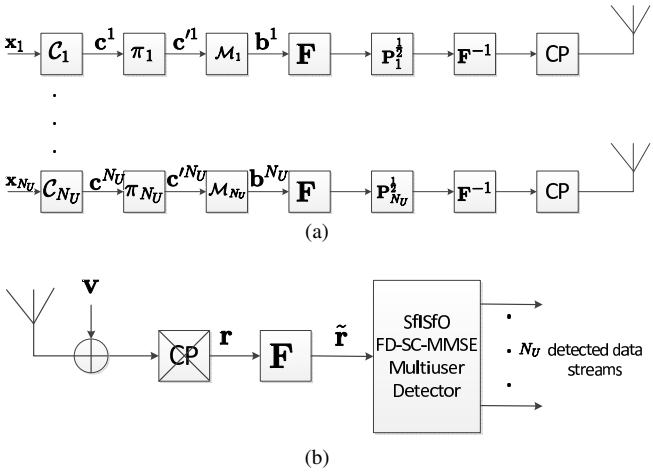

Fig. 1. The block diagram of (a) the transmitter side (b) the receiver side of the system model.

per modulation symbol. After the modulation, each user's data stream is transformed into the frequency domain by performing the discrete Fourier transform (DFT) and multiplied with its associated power allocation matrix. Finally, before transmission, each user's data stream is transformed into the time domain by the inverse DFT (IDFT) and a cyclic prefix is added to mitigate inter symbol interference (ISI).

At the receiver side, after the cyclic prefix removal, the frequency domain signal $\tilde{\mathbf{r}} \in \mathbb{C}^{N_F}$, where N_F is the number of frequency bins in DFT, can be expressed as [12]

$$\tilde{\mathbf{r}} = \mathbf{\Gamma}\mathbf{P}^{\frac{1}{2}}\mathbf{F}_{N_U}\mathbf{b} + \mathbf{F}\mathbf{v}, \tag{1}$$

with $\mathbf{\Gamma} \in \mathbb{C}^{N_F \times N_U N_F}$ being the frequency domain space-frequency channel matrix

$$\mathbf{\Gamma} = \mathbf{F}\mathbf{H}\mathbf{F}_{N_U}^{-1}. \tag{2}$$

$\mathbf{H} = [\mathbf{H}_1, \mathbf{H}_2, \ldots, \mathbf{H}_{N_U}]^{\mathrm{T}} \in \mathbb{C}^{N_F \times N_U N_F}$ is the circulant block channel matrix, where $\mathbf{H}_u \in \mathbb{C}^{N_F \times N_F}$, $u = 1, 2, \ldots, N_U$, is a circulant block matrix corresponding to the uth user denoted as $\mathbf{H}_u = \text{circ}\{[h_1^u, h_2^u, \ldots, h_{N_L}^u, \mathbf{0}_{1\times N_F - N_L}]^{\mathrm{T}}\}$. The operator circ$\{\}$ generates matrix that has a circulant structure of its argument vector and N_L denotes the length of the channel impulse response. $\mathbf{F}_{N_U} = \mathbf{I}_{N_U} \otimes \mathbf{F} \in \mathbb{C}^{N_U N_F \times N_U N_F}$, where $\otimes$ is the Kronecker product, is the block diagonal DFT matrix for the N_U users with $\mathbf{F} \in \mathbb{C}^{N_F \times N_F}$ being the DFT matrix with elements $f_{m,l} = \frac{1}{\sqrt{N_F}} \exp(i2\pi(m-1)(l-1)/N_F)$. $\mathbf{P} \in \mathbb{R}^{N_U N_F \times N_U N_F}$ is the power allocation matrix denoted as $\mathbf{P} = \text{diag}(\mathbf{P}_1, \mathbf{P}_2, \ldots, \mathbf{P}_{N_U})$ with $\mathbf{P}_u = \text{diag}([P_{u,1}, P_{u,2}, \ldots, P_{u,N_F}]^{\mathrm{T}}) \in \mathbb{R}^{N_F \times N_F}$, $u = 1, 2, \ldots, N_U$, and $\mathbf{b} = [\mathbf{b}^{1^{\mathrm{T}}}, \mathbf{b}^{2^{\mathrm{T}}}, \ldots, \mathbf{b}^{N_U{}^{\mathrm{T}}}]^{\mathrm{T}}$. $\mathbf{b}^u \in \mathbb{C}^{N_F}$, $u = 1, 2, \ldots, N_U$, is the modulated complex data vector for the uth user and $\mathbf{v} \in \mathbb{C}^{N_F}$ is white additive independent identically distributed (i.i.d.) Gaussian noise vector with variance σ^2.

III. Problem Formulation

The block diagram of the FD-SC-MMSE turbo equalizer is depicted in Fig. 2. The frequency domain signal after the soft

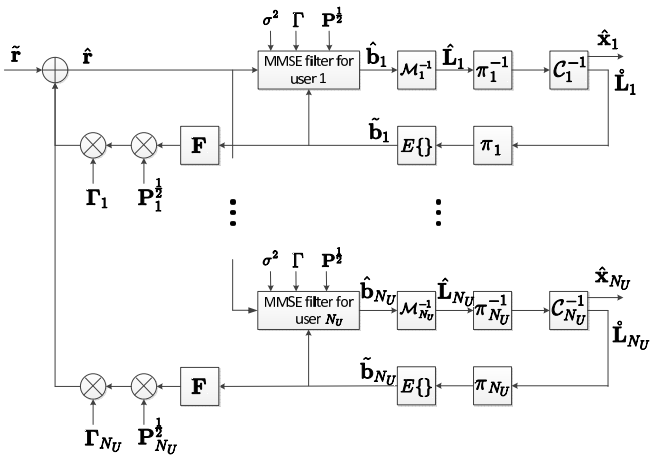

Fig. 2. The block diagram of FD-SC-MMSE turbo equalizer.

cancelation can be written as

$$\hat{\mathbf{r}} = \tilde{\mathbf{r}} - \mathbf{\Gamma}\mathbf{P}^{\frac{1}{2}}\mathbf{F}_{N_U}\tilde{\mathbf{b}}, \tag{3}$$

where $\tilde{\mathbf{b}} = [\tilde{\mathbf{b}^1}^{\mathrm{T}}, \tilde{\mathbf{b}^2}^{\mathrm{T}}, \ldots, \tilde{\mathbf{b}^{N_U}}^{\mathrm{T}}]^{\mathrm{T}} \in \mathbb{C}^{N_U N_F}$ are the soft symbol estimates of the modulated complex symbols. $\hat{\mathbf{L}}_u$ and $\mathring{\mathbf{L}}_u$ denotes the log-likelihood ratios (LLRs) provided by the equalizer and the channel decoder of user u, respectively, and $\hat{\mathbf{x}}_u$ denotes the estimate of $\mathbf{x}_u$. The problem formulation follows that presented in [10]. Let $\hat{I}_u^{\mathrm{E}}$ denote the MI between the transmitted interleaved coded bits $\mathbf{c}'^u$ and the LLRs at the output of the equalizer $\hat{\mathbf{L}}_u$. Moreover, let $\hat{I}_u^{\mathrm{A}}$ denote the *a priori* MI at the input of the equalizer and $\hat{f}_u()$ denote a monotonically increasing EXIT function of the equalizer of the uth user. Now, we can write the following relationship:

$$\hat{I}_u^{\mathrm{E}} = \hat{f}(\hat{I}_1^{\mathrm{A}}, \hat{I}_2^{\mathrm{A}}, \ldots, \hat{I}_{N_U}^{\mathrm{A}}). \tag{4}$$

Similarly, let $\mathring{I}_u^{\mathrm{E}}$ denote the extrinsic MI at the output of the decoder and $\mathring{I}_u^{\mathrm{A}}$ *a priori* MI at the input of the decoder. We can write

$$\mathring{I}_u^{\mathrm{E}} = \mathring{f}_u(\mathring{I}_u^{\mathrm{A}}), \tag{5}$$

where $\mathring{f}_u()$ is a monotonically increasing and, hence, invertible EXIT function of the decoder.

Because interleaving has no impact on the MI, thus $\hat{I}_u^{\mathrm{E}} = \mathring{I}_u^{\mathrm{A}}$ and $\hat{I}_u^{\mathrm{A}} = \mathring{I}_u^{\mathrm{E}}$, and we can express the condition for keeping the convergence tunnel open as

$$\hat{f}_u(\mathring{I}_1^{\mathrm{E}}, \mathring{I}_2^{\mathrm{E}}, \ldots, \mathring{I}_{N_U}^{\mathrm{E}}) \geq \mathring{f}_u^{-1}(\mathring{I}_u^{\mathrm{E}}) + \epsilon_u, \tag{6}$$

where ϵ_u is a parameter controlling the minimum gap between the EXIT surfaces. To make the problem tractable, continuous convergence condition (6) is discretized and replaced with

$$\hat{f}_u(\mathring{I}_{1,k}^{\mathrm{E}}, \mathring{I}_{2,k}^{\mathrm{E}}, \ldots, \mathring{I}_{N_U,k}^{\mathrm{E}}) \geq \mathring{f}_u^{-1}(\mathring{I}_{u,k}^{\mathrm{E}}) + \epsilon_{u,k}, \forall u = 1, 2 \ldots, N_U, \quad \forall k = 1, 2, \ldots, N_K. \tag{7}$$

In this paper, we assume $\epsilon_{u,k} = \epsilon_u$, $\forall k < N_K$ and $\epsilon_{u,N_K} = 0$.

Using the inverse of the J-function [13][2], the constraints can

[2]J-function assumes that the LLRs are Gaussian distributed with variance being equal to two times mean.

be transformed to variance constraints, i.e.,

$$\begin{aligned}\mathrm{J}^{-1}(\hat{f}_u(\mathring{I}^{\mathrm{E}}_{1,k},\mathring{I}^{\mathrm{E}}_{2,k},\ldots,\mathring{I}^{\mathrm{E}}_{N_U,k})) \geq & \mathrm{J}^{-1}(\mathring{f}_u^{-1}(\mathring{I}^{\mathrm{E}}_{u,k})+\epsilon_{u,k}),\\ & \forall u=1,2\ldots,N_U,\\ & \forall k=1,2,\ldots,N_K, \end{aligned} \tag{8}$$

which leads to

$$\hat{\sigma}^2_{u,k} \geq \mathring{\sigma}^2_{u,k}, \quad u=1,2,\ldots,N_U, \quad k=1,2\ldots,N_K. \tag{9}$$

When Gray-mapped quadrature phase shift keying (QPSK) modulation is used, the variance of the LLRs at the output of the equalizer can be expressed as [10]

$$(\hat{\sigma}_{u,k})^2 = \frac{4\zeta_{u,k}}{1-\zeta_{u,k}\bar{\Delta}_{u,k}}, \tag{10}$$

Finally, the convergence constraint power minimization problem can be expressed as

$$\begin{aligned} \underset{\mathbf{P}}{\text{minimize}} \quad & \mathrm{tr}\{\mathbf{P}\} \\ \text{subject to} \quad & \zeta_{u,k} \geq \xi_{u,k}, \quad u=1,2,\ldots,N_U, \\ & \qquad\qquad\quad k=1,2,\ldots,N_K, \\ & P_{u,f} \geq 0, \quad u=1,2,\ldots,N_U, \\ & \qquad\qquad\quad f=1,2,\ldots,N_F, \end{aligned} \tag{11}$$

where

$$\xi_{u,k} = \frac{(\mathring{\sigma}_{u,k})^2}{4+(\mathring{\sigma}_{u,k})^2\bar{\Delta}_{u,k}} \tag{12}$$

is constant. The parameter $\zeta_{u,k}$ is so called effective SNR of the prior symbol estimate and is calculated as [12]

$$\zeta_{u,k} = \frac{1}{N_F}\sum_{f=1}^{N_F}\frac{P_{u,f}|\Gamma_{u,f}|^2}{\sum_{l=1}^{N_U}|\Gamma_{l,f}|^2 P_{l,f}\bar{\Delta}_{u,k}+\sigma^2}. \tag{13}$$

$\bar{\Delta}_{u,k} \in \mathbb{R}$ is the average residual interference of the soft symbol estimates and is given by

$$\bar{\Delta}_{u,k} = \mathrm{avg}\{\mathbf{1}_{N_F} - \ddot{\mathbf{b}}^u\}, \tag{14}$$

where $\ddot{\mathbf{b}}^u = [|\tilde{b}^u_1|^2, |\tilde{b}^u_2|^2, \ldots, |\tilde{b}^u_{N_F}|^2]^{\mathrm{T}} \in \mathbb{C}^{N_F}$. The soft symbol estimate $\tilde{b}^u_n$ is calculated as

$$\tilde{b}^u_n = E\{b^u_n\} = \sum_{b_i \in \mathfrak{B}} b_i \Pr(b^u_n = b_i), \tag{15}$$

where $\mathfrak{B}$ is the modulation symbol alphabet, and the symbol *a priori* probability can be calculated by

$$\Pr(b^u_n = b_i) = \left(\frac{1}{2}\right)^{N_Q}\prod_{q=1}^{N_Q}(1-\bar{c}_{i,q}\tanh(\lambda^u_{n,q}/2)), \tag{16}$$

with $\bar{c}_{i,q} = 2c_{i,q}-1$ and $\lambda^u_{n,q}$ is the *a priori* LLR of the bit $c_{i,q}$, provided by the decoder.

An example of the convergence constraint problem formulation is represented in the EXIT chart depicted in Fig. 3. Note that if we allow $\mathcal{C}_i \neq \mathcal{C}_j$, $i \neq j$, for some i, j, the number of the constraints in problem (11) increases exponentially with the number of users. More specifically, the number of constraints is $N_U N_K^{N_U}$. A 3-dimensional example of the convergence constraint problem formulation for user 1 is shown in EXIT

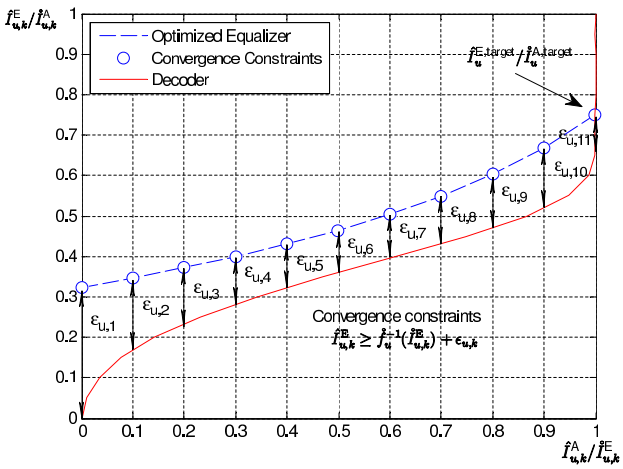

Fig. 3. An example of 2 dimensional formulation of the problem.

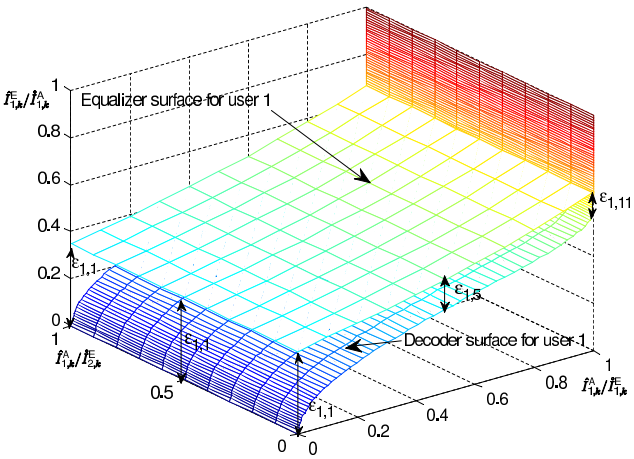

Fig. 4. An example of 3 dimensional formulation of the problem.

chart depicted in Fig. 4. $\hat{I}^{\mathrm{A}}_{1,k}/\mathring{I}^{\mathrm{E}}_{u,k}$, $u=1,2$, denotes the *a priori* information for the equalizer of the user 1 coming from the decoder of the user u. The constraints indicate that the gap between the EXIT surfaces has to be $\epsilon_{u,k}$, $\forall u, k$, in each dimension. In other words, the gap between the EXIT surfaces has to be $\epsilon_{u,k}$, $\forall u, k$, regardless of the other users' decoder inputs. However, if we require that the surfaces do not intersect, only active constraints are the ones where there is no *a priori* information available from the other users.

Assuming that the modulation coding scheme (MCS), i.e., forward error correction code (FEC) and modulation mapping, is identical for all the users and discretization of EXIT functions is performed so that $\mathring{I}^{\mathrm{E}}_{1,k} = \mathring{I}^{\mathrm{E}}_{2,k} = \cdots = \mathring{I}^{\mathrm{E}}_{N_U,k}$, we can write $\mathring{I}^{\mathrm{A}}_{1,k} = \mathring{I}^{\mathrm{A}}_{2,k} = \cdots = \mathring{I}^{\mathrm{A}}_{N_U,k}$. Furthermore, $\bar{\Delta}_{u,k}$ is a function of the decoder output $\bar{\Delta}_{u,k} = f_{\bar{\Delta}}(\mathring{I}^{\mathrm{E}}_{u,k})$. Under the assumption that all users use the same MCS, we can write $\bar{\Delta}_{1,k} = \bar{\Delta}_{2,k} = \cdots = \bar{\Delta}_{N_U,k}$. This leads to the fact that if the same MCS is used by all the users, we can project the N_U+1-dimensional EXIT constraints in to 2 dimension and reduce the number of constraints to $N_U N_K$.

IV. Successive Convex Approximation

Problem (11) is clearly non-convex. Hence, we reformulate the problem as a difference-of-convex-functions program [14] and solve it by using SCA.

We will introduce new variables $\alpha_{u,f} \in \mathbb{R}$, such that $P_{u,f} = e^{\alpha_{u,f}}, \forall u, f$. Since the inequality constraint in Problem (11) holds with equality at the optimal point, the problem can be equivalently written as

$$\begin{aligned} \underset{\boldsymbol{\alpha},\boldsymbol{\omega}}{\text{minimize}} \quad & \textstyle\sum_{u=1}^{N_U} \sum_{f=1}^{N_F} e^{\alpha_{u,f}} \\ \text{subject to} \quad & \textstyle\sum_{f=1}^{N_F} \omega_{f,k}^u \geq N_F \xi_{u,k} \\ & u = 1,2,\ldots,N_U,\ k = 1,2,\ldots,N_K, \\ & \frac{e^{\alpha_{u,f}} |\Gamma_{u,f}|^2}{\sum_{l=1}^{N_U} e^{\alpha_{l,f}} |\Gamma_{l,f}|^2 \bar{\Delta}_{l,k} + \sigma^2} \geq \omega_{f,k}^u, \qquad (**) \\ & u = 1,2,\ldots,N_U,\ k = 1,2,\ldots,N_K, \\ & f = 1,2,\ldots,N_F, \\ & P_{u,f} \geq 0,\ u = 1,2,\ldots,N_U,\ f = 1,2,\ldots,N_F, \end{aligned} \tag{17}$$

where $\boldsymbol{\omega} = \{\omega_{f,k}^u : u = 1,2,\ldots,N_U, k = 1,2,\ldots,N_K, f = 1,2,\ldots,N_F\}$, and $\boldsymbol{\alpha} = \{\alpha_{u,f} : u = 1,2,\ldots,N_U, f = 1,2,\ldots,N_F\}$. Taking the natural logarithm of the both sides of $(**)$ yields

$$\alpha_{u,f} + \ln|\Gamma_{u,f}|^2 - \ln(\sum_{l=1}^{N_U} e^{\alpha_{l,f}} |\Gamma_{u,f}|^2 \bar{\Delta}_{l,k} + \sigma^2) \geq \ln \omega_{f,k}^u. \tag{18}$$

It is well known that logarithm of the summation of the exponentials is convex. Hence, the left hand side (LHS) of the constraint (18) is concave. It is straightforward to formulate (18) as a difference of convex functions and locally approximate the concave part with its best convex upper bound, i.e., linear approximation of $\ln \omega_{f,k}^u$ at point $\hat{\omega}_{f,k}^u$:

$$W(\omega_{f,k}^u, \hat{\omega}_{f,k}^u) = \ln \hat{\omega}_{f,k}^u + \frac{(\omega_{f,k}^u - \hat{\omega}_{f,k}^u)}{\hat{\omega}_{f,k}^u}. \tag{19}$$

A local convex approximation of Problem (17) can be written as

$$\begin{aligned} \underset{\boldsymbol{\alpha},\boldsymbol{\omega}}{\text{minimize}} \quad & \textstyle\sum_{u=1}^{N_U} \sum_{f=1}^{N_F} e^{\alpha_{u,f}} \\ \text{subject to} \quad & \textstyle\sum_{f=1}^{N_F} \omega_{f,k}^u \geq N_F \xi_{u,k}, u = 1,2,\ldots,N_U, \\ & k = 1,2,\ldots,N_K, \\ & \alpha_{u,f} + \ln|\Gamma_{u,f}|^2 - \ln(\textstyle\sum_{l=1}^{N_U} e^{\alpha_{l,f}} |\Gamma_{u,f}|^2 \bar{\Delta}_{l,k} \\ & + \sigma^2) \geq W(\omega_{f,k}^u, \hat{\omega}_{f,k}^u), u = 1,2,\ldots,N_U, \\ & k = 1,2,\ldots,N_K, f = 1,2,\ldots,N_F, \end{aligned} \tag{20}$$

and it can be solved efficiently by using standard optimization tools, e.g., interior-point methods [15].

The SCA algorithm starts by a feasible initialization $\hat{\omega}_{f,k}^u = \hat{\omega}_{f,k}^{u(0)}, \forall u, k, f$. After this, the Problem (20) is solved yielding a solution $\omega_{f,k}^{u(*)}$ which is used as a new point for the linear approximation. The procedure is repeated until convergence. The SCA algorithm is summarized in **Algorithm** 1. It has been shown in [14] that SCA of difference of convex functions monotonically converges to a local optimum of the original problem.

Algorithm 1 Successive convex approximation algorithm.

1: Set $\hat{\omega}_{f,k}^u = \hat{\omega}_{f,k}^{u(0)}, \forall u, k, f$.
2: **repeat**
3: Solve Eq. (20).
4: Update $\hat{\omega}_{f,k}^u = \omega_{f,k}^{u(*)}, \forall u, k, f$.
5: **until** Convergence.

TABLE I
Channel Coefficients

u	1	2
h_1^u	0.0993 - 0.0204i	-0.0673 + 0.1709i
h_2^u	0.1669 + 0.2379i	0.1522 - 0.2164i
h_3^u	-0.1509 - 0.0012i	0.2374 + 0.0122i
h_4^u	-0.1519 + 0.2802i	-0.2115 + 0.0296i
h_5^u	0.1088 - 0.0368i	0.0526 + 0.1444i

V. Numerical Results

In this section, we will show the results obtained by the simulations to evaluate the performance of the proposed algorithm. The results are obtained with the following parameters: $N_U = 2$, $N_F = 8$, $N_K = 11$, QPSK with Gray mapping, and systematic repeat accumulate (RA) codes [16] with a code rate 1/3. Furthermore, we set $\epsilon_u = 0.05$, $u = 1,2$, $\hat{I}_1^{\text{E,target}} = \hat{I}_2^{\text{E,target}}$, and $\hat{I}_1^{\text{A,target}} = \hat{I}_2^{\text{A,target}} = 0.9999$. The signal-to-noise ratio averaged over frequency bins is defined by SNR= $\text{tr}\{\mathbf{P}\}/(N_F \sigma^2)$. We consider two different channel conditions, namely, a static 5-path channel, path gains shown in Table I, and a quasi-static Rayleigh fading 5-path average equal gain channel with 200 channel realizations. The trajectory simulations for EXIT charts were carried out with a random interleaver with the size 288000 bits.

A verification simulation of the system is shown in the EXIT chart depicted in Fig. 5. *Arbitrary orthogonal allocation* (AOA) means that one half of the frequency bins are arbitrarily allocated to user 1 and the other half are given to user 2. AOA power allocation problem can be decoupled to N_U single user problems. Hence AOA is a convex problem [10] and can be efficiently solved by using convex programming tools.

Exhaustive search (ES) indicates that every possible orthogonal allocation is tested and the best one is chosen. This is not a practical solution when the number of frequency bins N_F grow larger. We used the channel given in Table I to verify our simulations. It can be seen in Fig. 5, that for all of the precoding methods used, the EXIT curve of the equalizer ends up with the preset value $(\hat{I}_1^{\text{A,target}}, \hat{I}_1^{\text{E,target}} = (0.9999, 0.8)$. Trajectory is the result of chain simulation performed by using CCPA and it can be seen that the trajectory matches to EXIT curves.

The performance of the proposed method in terms of SNR vs. MI target is depicted in Fig. 6. AOA end ES methods are also plotted for comparison. MI target can be converted to bit error probability (BEP) by using the equation [13]

$$P_b \approx \frac{1}{2} \text{erfc}\left(\frac{\sqrt{\mathrm{J}^{-1}(\hat{I}_1^{\text{A,target}}) + \mathrm{J}^{-1}(\hat{I}_1^{\text{E,target}})}}{2\sqrt{2}} \right). \tag{21}$$

Four different $\hat{I}_1^{\text{E,target}}$ values were considered, namely 0.7,

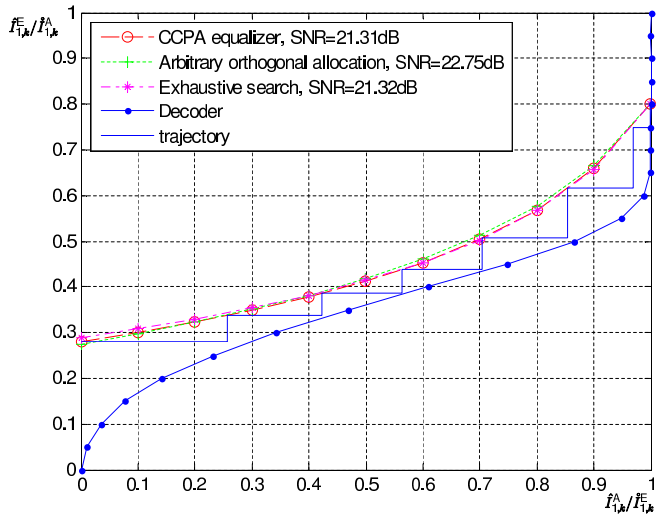

Fig. 5. EXIT chart for user 1 in a static channel with $(\hat{I}_1^{\mathrm{A,target}}, \hat{I}_1^{\mathrm{E,target}} = (0.9999, 0.8)$.

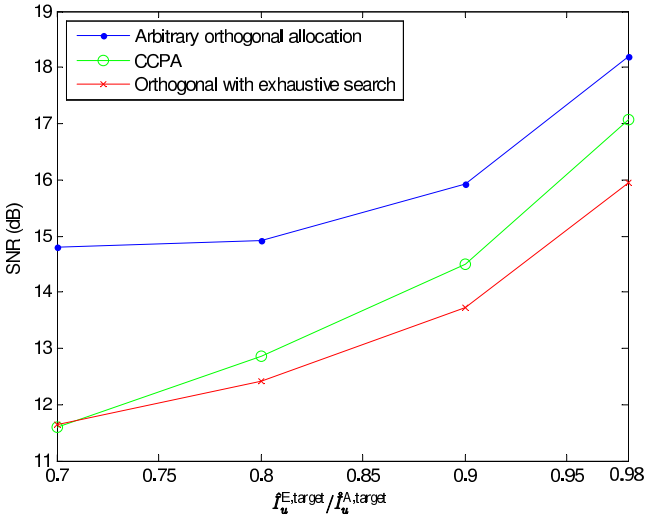

Fig. 6. MI target vs. SNR.

0.8, 0.9 and 0.98, corresponding to BEP values $0.647 \cdot 10^{-5}$, $0.4529 \cdot 10^{-5}$, $0.2417 \cdot 10^{-5}$, $0.0527 \cdot 10^{-5}$, respectively. It can be seen from Fig. 6 that when $\hat{I}_1^{\mathrm{E,target}} = 0.7$, CCPA can achieve same SNR than ES algorithm. When $\hat{I}_1^{\mathrm{E,target}}$ increases, the performance of CCPA is found to be between ES and AOA.

VI. Conclusions

In this paper, we have derived the convergence constraint power allocation (CCPA) problem for iterative FD-SC-MMSE multiuser SISO detector. Moreover, we derived successive convex approximation algorithm for finding a local solution of the problem. The algorithm proposed in this paper, allows the full utilization of iterative receiver and its convergence properties. It was shown that the proposed algorithm can achieve the same performance in terms of transmit power consumption than exhaustive search type orthogonal allocation when MI target is low. When MI target is high, the performance of the proposed algorithm is somewhere between arbitrary orthogonal allocation and exhaustive search (ES) allocation. According to our experiments, in the case of multiuser SISO, the optimal allocation is likely to be orthogonal, for which ES provides the best possible solution. Future work will be the multiantenna extension, where the orthogonal allocation is going to be clearly suboptimal.

Acknowledgements

The authors would like to thank Mr. Jarkko Kaleva for the very useful reformulation hint.

References

[1] 3rd Generation Partnership Project (3GPP); Technical Specification Group Radio Access Network Evolved Universal Terrestrial Radio Access E-UTRA, "Physical channels and modulation 3GPP TS 36.211 Version 11.0.0 (Release 11)," Tech. Rep., 2012.

[2] D. Palomar, M. Cioffi, and M. Lagunas, "Joint tx-rx beamforming design for multicarrier MIMO channels," *IEEE Trans. Signal Processing*, vol. 51, no. 9, pp. 2381–2401, 2003.

[3] A. Scaglione, P. Stoica, S. Barbarossa, G. Giannakis, and H. Sampath, "Optimal designs for space-time linear precoders and decoders," *IEEE Trans. Signal Processing*, vol. 50, no. 5, pp. 1051–1064, May 2002.

[4] J. Karjalainen and T. Matsumoto, "On the convergence property of an MMSE multiuser MIMO turbo detector with uplink precoding," in *Proc. IEEE Int. Conf. Commun.*, Beijing, China, May19–23 2008.

[5] J. Karjalainen, T. Matsumoto, and W. Utschick, "Convergence analysis of MMSE based multiuser MIMO turbo detector with linear precoding strategies," in *Proc. Int. Symp. on Turbo Codes and Related Topics*, Lausanne, Switzerland, Sep.1–5 2008.

[6] D. Shepherd, Z. Shi, M. Reed, and F. Schreckenbach, "Optimization of unequal power coded multiuser DS-CDMA using extrinsic information transfer charts," in *Proc. Conf. Inform. Sciences Syst. (CISS)*, Princeton, USA, Mar. 2006.

[7] S. ten Brink, "Convergence behavior of iteratively decoded parallel concatenated codes," *IEEE Trans. Commun.*, vol. 49, no. 10, pp. 1727–1737, Oct. 2001.

[8] X. Yuan, H. Li, L. Ping, and X. Lin, "Precoder design for ISI channels based on iterative LMMMSE equalization," in *Proc. Int. Symp. on Turbo Codes and Related Topics*, Lausanne, Switzerland, Sep.1–5 2008, pp. 198–203.

[9] X. Yuan, Q. Guo, X. Wang, and L. Ping, "Evolution analysis of low-cost iterative equalization in coded linear systems with cyclic prefix," *IEEE J. Select. Areas Commun.*, vol. 26, no. 2, pp. 301–310, Feb. 2008.

[10] J. Karjalainen, M. Codreanu, A. Tölli, M. Juntti, and T. Matsumoto, "EXIT chart-based power allocation for iterative frequency domain MIMO detector," *IEEE Trans. Signal Processing*, vol. 59, no. 4, pp. 1624–1641, Apr. 2011.

[11] M. Chiang, "Nonconvex optimization for communication networks," in *Advances in Applied Mathematics and Global Optimization*, ser. Advances in Mechanics and Mathematics, D. Y. Gao and H. D. Sherali, Eds. Springer US, 2009, vol. 17, pp. 137–196. [Online]. Available: http://dx.doi.org/10.1007/978-0-387-75714-8_5

[12] J. Karjalainen, "Broadband single carrier multi-antenna communications with frequency domain turbo equalization," Ph.D. dissertation, University of Oulu, Oulu, Finland, 2011.

[13] F. Brännström, L. K. Rasmussen, and A. J. Grant, "Convergence analysis and optimal scheduling for multiple concatenated codes," *IEEE Trans. Inform. Theory*, vol. 51, no. 9, pp. 3354–3364, Sep. 2005.

[14] J. Kaleva, A. Tölli, and M. Juntti, "Weighted Sum Rate Maximization for Interfering Broadcast Channel via Successive Convex Approximation," in *Proc. IEEE Global Telecommun. Conf.*, Dec. 2012.

[15] S. Boyd and L. Vandenberghe, *Convex Optimization*. Cambridge, U.K.: Cambridge Univ. Press, 2004.

[16] D. Divsalar, H. Jin, and R. J. McEliece, "Coding theorems for 'turbo-like' codes," in *Proc. Annual Allerton Conf. Commun., Contr., Computing*, Urbana, Illinois, USA, Sep.23–25 1998, pp. 201–210.