JAIST Repository
https://dspace.jaist.ac.jp/

Title	Turbo transceivers for MIMO wireless communications
Author(s)	Matsumoto, Tad; Thoma, Reiner
Citation	Proceedings of the 2004 International Symposium on Antennas and Propagation (ISAP 2004), 2A1: 281-284
Issue Date	2004-08
Type	Conference Paper
Text version	publisher
URL	http://hdl.handle.net/10119/9121
Rights	Copyright (C)2004 IEICE. Tad Matsumoto, Reiner Thoma, Proceedings of the 2004 International Symposium on Antennas and Propagation (ISAP 2004), 2A1, 2004, pp.281-284.
Description	ISAP 2004 : August 18-21, 2004 Sendai, Japan.

JAIST
JAPAN
ADVANCED INSTITUTE OF
SCIENCE AND TECHNOLOGY

Japan Advanced Institute of Science and Technology

Proceedings of ISAP'04, Sendai, JAPAN

"Turbo Transceivers for MIMO Wireless Communications"

Tad Matsumoto
Tadashi.matsumoto@ee.oulu.fi
Center for Wireless Communications
University of Oulu
P.O. Box 4500, FIN-90014, Oulu, Finland

Reiner Thoma
tho@e-technik.tu-ilmenau.de
Electronic Measurement Research Laboratory
Ilmenau University of Technology
PF 100565, 98684 Ilmenau, Germany

Abstract The discovery of the Turbo codes has driven research on the creation of new signal detection concepts that can, in general, be referred to as the Turbo approach. Recently, this approach has made a drastic change in creating signal detection techniques and algorithms such as equalization of inter-symbol interference (ISI) experienced by broadband single carrier signaling over mobile radio channels [1]. A goal of this lecture is to provide the participants with broad views and knowledge of the Turbo concept-based Multiple-Input Multiple-Output (MIMO) signal transmission techniques by explaining how the techniques were developed in various applications, and how they improves performances.

1. Turbo Equalization with Soft Cancellation and MMSE Filtering

It has long been believed that the computational complexity needed for the ISI equalization in broadband single carrier signaling is prohibitive, belief of which this lecture shall overturn. The recent advance in signal processing techniques has created a new flexible and robust iterative (Turbo) signal detection framework based on soft cancellation and minimum mean squared error (MMSE) filtering [2], [3], which is referred to as SC/MMSE in this lecture. This lecture is started by briefly introducing the SC/MMSE technique as a general signal processing structure, and it applies the technique to the equalization of channels suffering from severe ISI.

This lecture then focuses on MIMO signal detection techniques using SC/MMSE, of which resulting device is called the SC/MMSE MIMO Turbo equalizer [4], [5]. Figure 1 shows a block diagram of the SC/MMSE MIMO Turbo Equalizer for single carrier signaling. The SC/MMSE MIMO Turbo detector performs joint channel estimation, multiple stream signal detection, and decoding of channel codes, all in an iterative manner. The SC/MMSE MIMO Turbo equalizer forms soft replicas of CCI from other users' signals and ISI on the desired signal to be detected using *a priori* Log-Likelihood Ratios (LLRs) output by each user's Soft-Input Soft-Output (SISO) channel decoder. The soft CCI and ISI replicas are subtracted from the received signal vector, of which process is refereed to as soft cancellation. MMSE filtering that follows the soft cancellation aims at suppressing the residual interference components remaining at the output of the soft canceller. *A posteriori* LLR value for each data stream is calculated from the MMSE filter output, and after de-interleaving, it is brought to each user's SISO decoder. The SISO decoders update the LLR values user-by-user, and then feed them back to the equalizer part, where soft estimates of CCI and ISI are formed using the updated LLR. The entire process is repeated. Because of the Turbo principle, iterations achieve performance gain. It is shown in this lecture that the SC/MMSE MIMO Turbo equalizer can asymptotically achieve the equivalent performance to the maximum likelihood sequence estimation (MLSE) single user detector, even though the SC/MMSE equalizer's complexity is a cubic order of the total path number in the equalizer's coverage.

The lecture then introduces several approximation methods [6],[7] of SC/MMSE to further reduce the complexity, which do not cause any significant performance losses. Some key approximations finally allow the

ISBN: 4-88552-206-4 C3055©IEICE

algorithm to be converted into the frequency domain, with which the computational complexity is of a logarithmic order of the equalizer's coverage per iteration [8]. Such a low complexity of equalizer is equivalent mostly to that of orthogonal frequency domain multiplexing (OFDM), which means that with the frequency domain SC/MMSE MIMO Turbo algorithm, required complexity for broadband single carrier signaling is at the same level as that of OFDM.

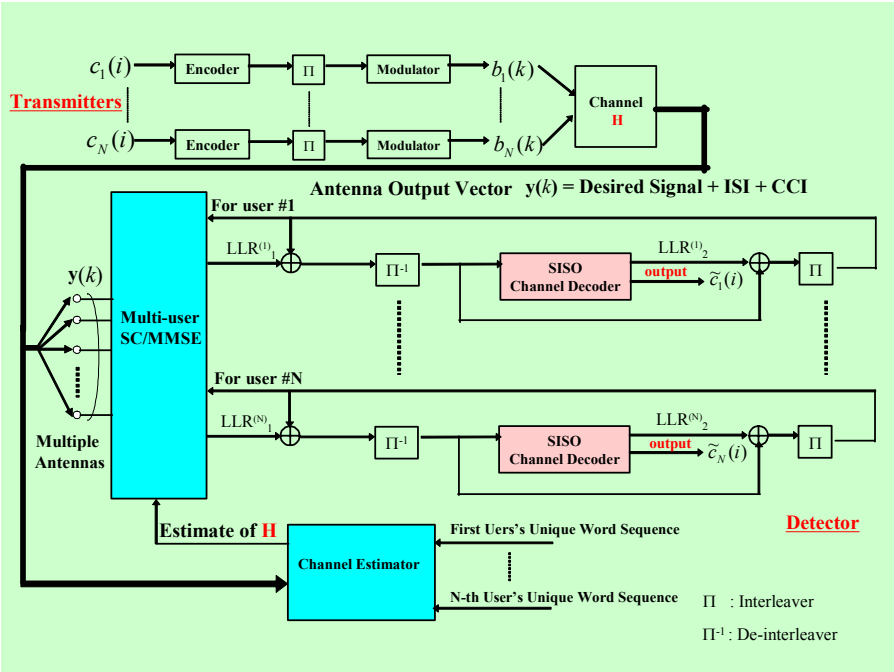

Figure 1 A Block diagram of single carrier MIMO system and SC/MMSE Turbo Equalizer

2. Dependency of Performance on Channel Characteristics

The purpose of this part of the lecture is to estimate the in-field performance of the SC/MMSE MIMO Turbo equalizer for broadband single-carrier signaling, and to correlate the MIMO performance figures with channel characteristics such as Direction-of-Arrival (DoA), Time-of-Arrival (ToA), Direction-of-Departure (DoD) as well as MIMO channel capacity [9], [10]. The methodologies for link-level simulations using channel sounding field measurement data are presented. Results of simulations conducted to evaluate in-field performances and to correlate the performance figures with the channel characteristics are presented. Figures 2 (A) and (B) show, as an example, for a 3-by-3 MIMO with the transmitter and receiver's antenna spacings being 1.0λ and 1.2λ, respectively, the time series of the bit errors after 4 iterations, indicated by yellow bars. The measurement took place in Ilmenau, a typical sub-urban area in Germany. Through the measurement campaign, a series of the 3-by-3 MIMO channel's impulse response was recorded, and the set of data was used in off-line simulations to evaluate performance of the single carrier SC/MMSE MIMO Turbo Equalizer. The blue curves in Figures 2 (A) and (B) indicate the RMS spatial and delay spreads, respectively. It is found that the larger the spreads in the spatial and temporal domains, the better the BER performance.

3. Some Recent Results related to MIMO

Finally, this lecture introduces some recent results of research work conducted by the lecturer's research group of Center for Wireless Communications, University of Oulu. The techniques introduced in this part of the lecture were evaluated through simulations using field measurement data. The measurement data was gathered in a courtyard of Ilmenau University of Technology, Ilmenau, Germany. Figure 3 (A) shows a map of the measurement area, and Figure 3 (B) shows DoD at the transmitter side and DoA at the receiver side versus the snapshot number..

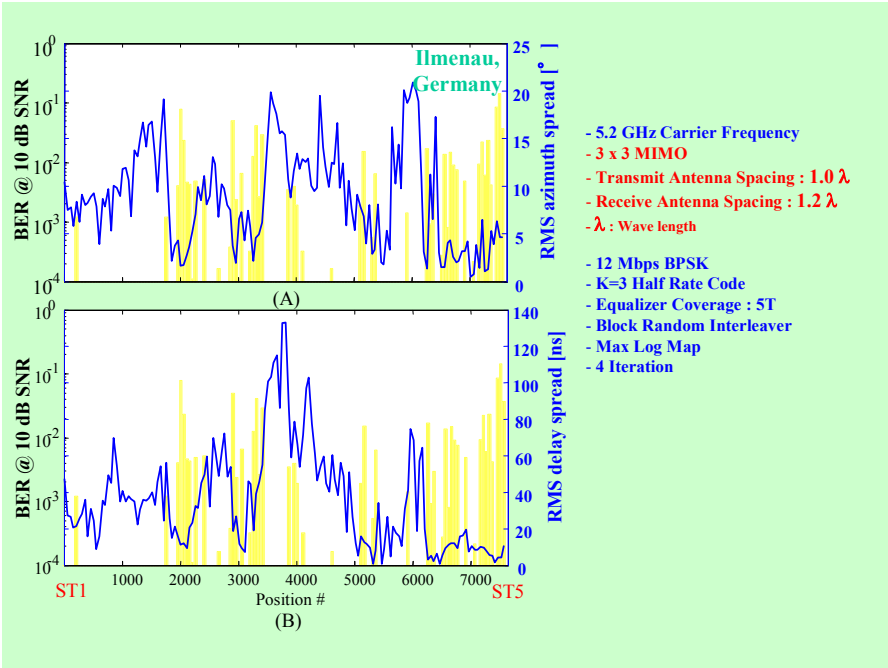

Figure 2 SC/MMSE BER Performances versus Delay and Spatial Spreads

3.1 BICM versus MLBICM

The SC/MMSE MIMO Turbo equalization technique is extended to bit interleaved coded modulation (BICM) where higher order modulation such as quadrature amplitude modulation (QAM) is assumed. A new technique [11] that well exploits the capacity benefit of memory channels is introduced using multi-level coding (referred to as MLBICM), which well fits the signal processing structure of SC/MMSE.

3.2 Antenna-by-Antenna Detection versus Joint Detection

Another topic to be presented is the impact of using different MMSE criterion on performances of Space-Time Trellis coded modulation in single carrier MIMO systems. Two criteria for MMSE filtering in SC/MMSE, one antenna-by-antenna optimization, and the other joint optimization over the transmit antennas [12], are considered. It is shown that different criteria result in different performance tendencies, depending on the channel characteristics. Figure 4 shows, as an example, results of the measurement data-based simulations conducted to evaluate symbol error rate (SER) performances with the two different criteria. It is found that in multipath-rich section, performances of the both schemes are almost the same, but in multipath-poor environments the antenna-by-antenna optimization suffers from performance degradation, while the joint optimization does not.

3.3 Per-Antenna Adaptive Modulation

Determining the multiplicity of the modulation format to be used by each of the multiple transmit antennas independently, based on the channel characteristics, is another way of keeping performance robustness [13]. Obviously, however, reducing the modulation format multiplicity results in decrease in information bit rate, and therefore it requires tradeoff between performance and quality. Results of field measurement data-based simulations are presented to demonstrate effectiveness of the per-antenna adaptive modulation technique in a 2x2 MIMO setup.

References

[1] C. Douillard, C.B.M. Jezequel, A. Picart, P. Didier, and A. Glavieux, “Iterative Correction of Inter-symbol Interference: Turbo-equalization”, European Trans. Telecommun., Vol. 6, No. 5, Sept. 1995, pp. 507-511 [2] D. Reynolds and X. Wang, “Low-complexity Turbo-equalization for Diversity Channels”, Signal Processing, Elsevier Science Publishers, Vol. 81, No. 5, May 2000, pp. 989-995 [3] M. Tuchler, R. Koetter, and A.C. Singer, “Turbo Equalization: Principle and New Results”, IEEE Trans. COM., Vol. 50, No. 50, May 2002, pp. 754-767 [4] T. Abe and T.

Matsumoto, “Space-Time Turbo Equalization in Frequency-Selective MIMO Channels”, IEEE Trans. VT., Vol. 52, No. 3, 2003, pp. 469-475 [5] T. Abe, S. Tomisato, and T. Matsumoto, “A MIMO Turbo Equalizer for Frequency-Selective Channels with Unknown Interference”, IEEE Trans. VT., Vol. 52, No. 3, 2003, pp. 476-482 [6] Oomori, T. Asai, and T. Matsumoto, “A Matched Filter Approximation for SC/MMSE Turbo Equalizers”, Proc. VTC2001-Fall, Atlantic City [7] K. Kansanen and T. Matsumoto, “A Computationally Efficient MIMO Turbo Equalizer”, Conf. Record of IEEE VTC2003-Spring, April 2003, Jeju [8] P. Schniter and H. Liu, “Iterative Equalization for Single Carrier Cyclic Prefix in Doubly Dispersive Channels”, *Conf. Record Asilomar Conf. on Signals, Systems and Computers,* Nov., 2003 [9] R. Thomä, D. Hampicke, A. Richter, G. Sommerkorn, A. Schneider, U. Trautwein, and W. Wirnitzer, “Identification of Time-Variant Directional Mobile Radio Channels”, *IEEE Trans. on Instrumentation and Measurement*, vol. 49, No. 2, pp. 357-364, April 2000 [10] U. Trautwein, T. Matsumoto, C. Schneider, and R. Thomä, "Exploring the Performance of Turbo MIMO Equalization in Real Field Scenarios”, Proc. 5th International Symposium on Wireless Personal Multimedia Communications-WPMC 2002/, Honolulu, Hawaii, pp. 422–426, Oct. 2002 [11] K. Kansanen and T. Matsumoto, “Turbo Equalization of Multilevel Coded QAM”, Conf. Record of IEEE SPAWC, June 2003, Rome [12] N. Veselinovic, T. Matsumoto, M. Juntti, "Iterative Receivers for STTrC-Coded MIMO Turbo EqualizationConf. Rec. of VTC2004-Spring, Milan [13] C. Scneider, M. Grossmann, and R. Thomä, “Performance of Antenna Variable Modulation for Turbo MIMO Transmission in Frequency-Selective Channels”, Conf. Rec. of ITG Workshop on Smart Antennas, 2004, Munich

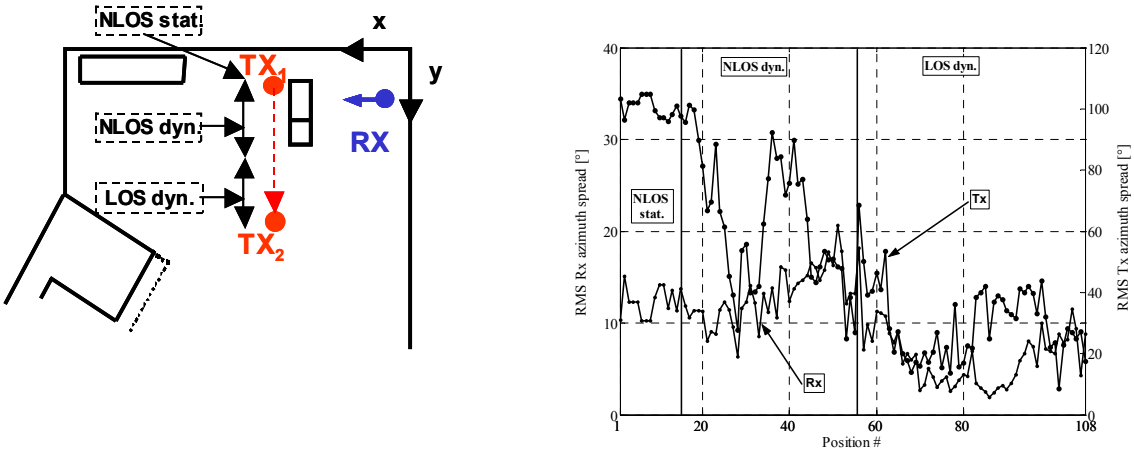

(A) (B)

Figure 3 (A): Map of the Measurement Area; (B): DoD at Tx and DoA at Rx versus Snapshot Number.

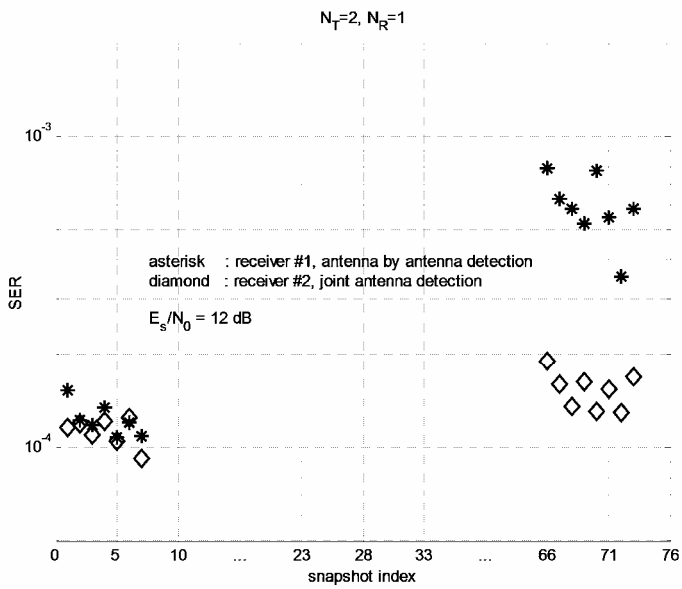

Figure 4 In-filed Performances of STTrC-SC/MMSE with Antenna-by-Antenna and Joint Optimization Criteria